BELIMO

Actuators for heating,
ventilation, air-conditioning

2. GM-4
Product Information
Damper actuators

GM

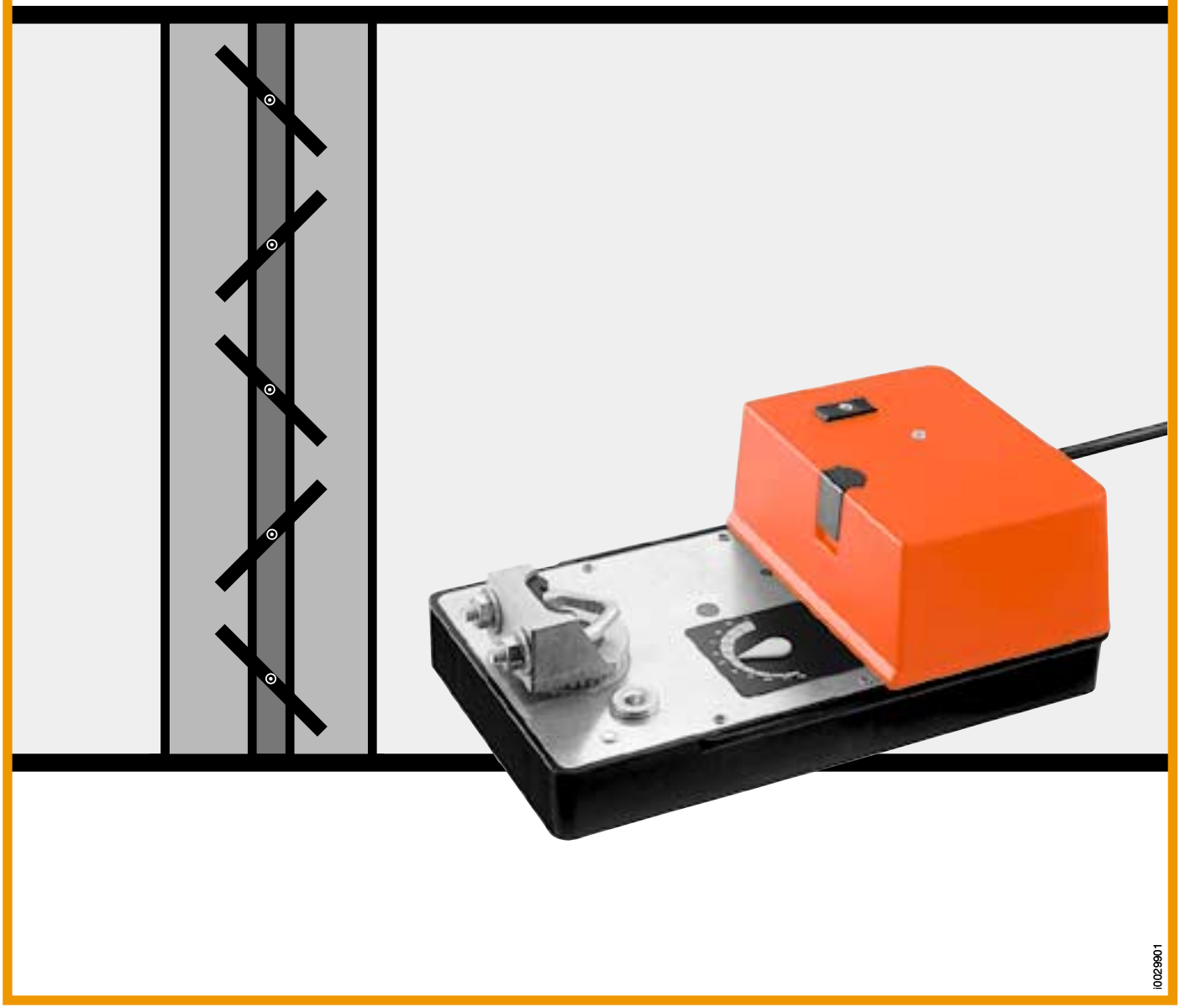

The complete range of damper actuators for general use in HVAC systems

Type	LM	NM	SM	AM	GM	LF	AF(R)
							
Torque	4 Nm	8 Nm	15 Nm	18 Nm	30 Nm	4 Nm	15 Nm
Spring return function	–	–	–	–	–	✓	✓
For dampers up to approx.	0.8 m²	1.5 m²	3 m²	3.6 m²	6 m²	0.8 m²	3 m²

i0100805

For more information, please contact your Belimo Representative or order any brochures you need by fax.

Fax to: **BELIMO** (address overleaf)

Please send us product brochures on the following damper actuators:

☐ LM... ☐ NM... ☐ SM... ☐ AM... ☐ LF... ☐ AF... ☐ AFR... ☐ Electrical accessories

Please also send information on:

☐ Motorized fire and smoke dampers
☐ Variable air-volume control (VAV-Control)
☐ Rotary-motion actuators and valves
☐ Linear-motion actuators and valves

☐ Please call us back

Sender

Company: _____

Name: _____

Address: _____

Post code: _____ Country: _____

Tel.: _____ Fax: _____

E-Mail: _____ Date: _____

ENG-93001-93224-05.02-2M · Printed in Switzerland · ZSD · Subject to technical changes

Selection table

Torque	30 Nm		GM24	GM220	GM240	GM24-SR
Nominal voltage	AC 24 V			●		●
	DC 24 V			●		●
	AC 230 V				●	●	
Running time	135 s ± 15 s			●		●
	≈ 180 s				●	●	
Control	Open/Close	Single-wire		●		
		2-wire		●	●	●	
	Modulating	DC 0...10 V or 0...20 V phasecut				●
Direction of rotation reversible (right/left)				●	●	●	●
Manual operation by pushbutton				●	●	●	●
Continuous position feedback						●

Note

Using BELIMO damper actuators
The actuators listed in this catalogue are intended for the operation of air dampers in HVAC systems.

Torque requirements
When calculating the torque required to operate dampers, it is essential to take into account all the data supplied by the damper manufacturer concerning cross sectional area, design, mounting and air flow conditions.

ENG-93001-93224-05.02-2M · Printed in Switzerland · ZSD · Subject to technical changes

Dampers up to approx. 6 m²

Open/Close actuator (AC/DC 24 V)

Single-wire or 2-wire control

Improved functional safety
The damper actuator has no limit switches and is overload-proof. It stops automatically when it reaches the damper or actuator end stop.

Easy functional check
A functional check of damper operation is simplicity itself: the gearing can be disengaged by simply pressing a pushbutton on top of the case. While the pushbutton remains depressed, the damper can be operated by hand.

Simple installation
The damper actuator is fitted with a universal spindle clamp for quick and easy mounting directly on the damper spindle. The actuator is supplied with an anti-rotation strap for fixing it in position.

Electrical accessories

S1, S2	Auxiliary switches, page 8
SZS	Mid-position switch, page 9
P…	Feedback potentiometer, page 10

Mechanical accessories

ZG-GM2	Damper linkage kit, page 11
ZDB-GM	Limit stop, page 11

Mounting instructions, page 12

Important
Read the notes about the use and torque requirements of the damper actuators on page 3.

Wiring diagram

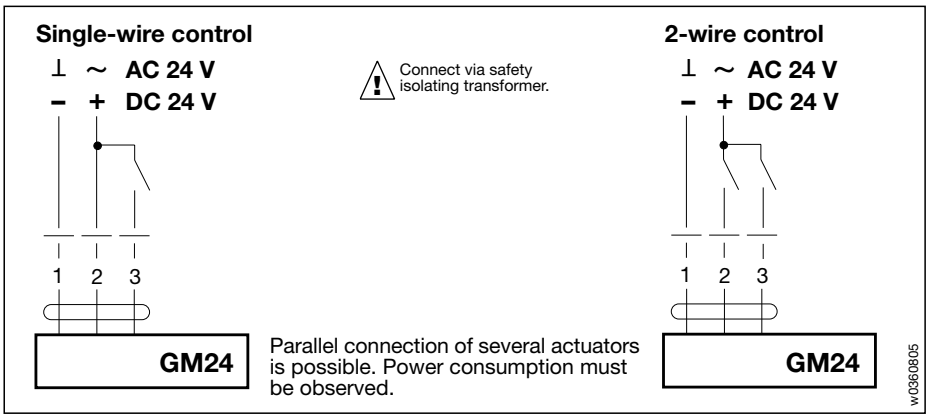

Technical data	GM24
Nominal voltage	AC 24 V 50/60 Hz, DC 24 V
Nominal voltage range	AC 19.2...28.8 V, DC 21.6...26.4 V
For wire sizing	6 VA
Power consumption	3 W running, 1 W at end position
Connecting cable	0.9 m long, 3×0.75 mm²
Direction of rotation	reversible with switch A/B
Torque	min. 30 Nm (at rated voltage)
Angle of rotation	mechanically limited to 95°
Running time	135 s ± 15 s
Sound power level	max. 45 dB(A)
Position indication	0…10 (0 = stop ↶) and reversible indicator
Protection class	(safety extra-low voltage)
Degree of protection	IP 54 (bottem cable entry)
Ambient temperature range Non-operating temperature Humidity test	–30…+50 °C –40…+80 °C to EN 60335-1
EMC	CE according to 89/336/EEC, 92/31/EEC, 93/68/EEC
Maintenance	maintenance free
Weight	2000 g

Dimensions

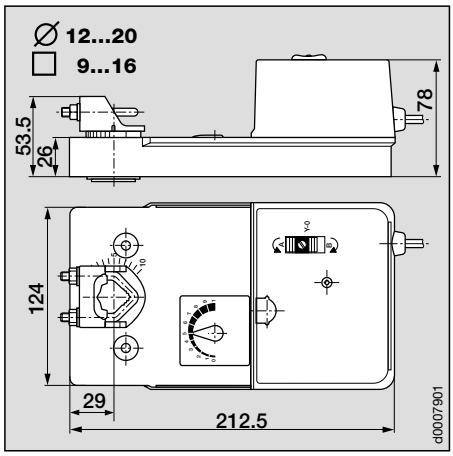

ENG-93001-93224-05.02-2M · Printed in Switzerland · ZSD · Subject to technical changes

Dampers up to approx. 6 m²

Open/Close actuator (AC 230 V)

2-wire control

Improved functional safety
The damper actuator has no limit switches and is overload-proof. It stops automatically when it reaches the damper or actuator end stop.

Easy functional check
A functional check of damper operation is simplicity itself: the gearing can be disengaged by simply pressing a pushbutton on top of the case. While the pushbutton remains depressed, the damper can be operated by hand.

Simple installation
The damper actuator is fitted with a universal spindle clamp for quick and easy mounting directly on the damper spindle. The actuator is supplied with an anti-rotation strap for fixing it in position.

Electrical accessories
S1, S2 Auxiliary switches, page 8
SZS Mid-position switch, page 9
P… Feedback potentiometer, page 10

Mechanical accessories
ZG-GM2 Damper linkage kit, page 11
ZDB-GM Limit stop, page 11

Mounting instructions, page 12

Important
Read the notes about the use and torque requirements of the damper actuators on page 3.

Wiring diagram

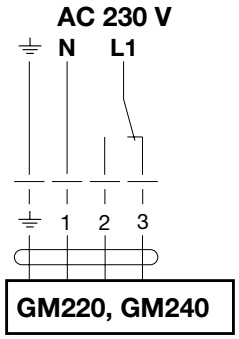

To isolate from the main power supply, the system must incorporate a device which disconnects the phase conductors (with at least a 3 mm contact gap).

Parallel connection of several actuators is possible (up to 20).

w0361805

Technical data	GM220, GM240
Nominal voltage	AC 230 V 50/60 Hz
Nominal voltage range	AC 198…264 V
For wire sizing	10 VA @ 50 Hz, 13 VA @ 60 Hz
Power consumption	10 W @ 50 Hz, 13 W @ 60 Hz
Connecting cable	0.9 m long, 4×0.75 mm²
Direction of rotation	reversible with switch A/B
Torque	min. 30 Nm (at rated voltage)
Angle of rotation	mechanically limited to 95°
Running time	≈ 180 s
Sound power level	max. 45 dB(A)
Position indication	0…10 (0 = stop ↶) and reversible indicator
Protection class	I (with PE conductor)
Degree of protection	IP 54 (bottom cable entry)
Ambient temperature range Non-operating temperature Humidity test	−30…+50 °C −40…+80 °C to EN 60335-1
EMC Low Voltage Directive	CE according to 89/336/EEC, 92/31/EEC, 93/68/EEC CE according to 73/23/EEC
Maintenance	maintenance free
Weight	2000 g

Dimensions

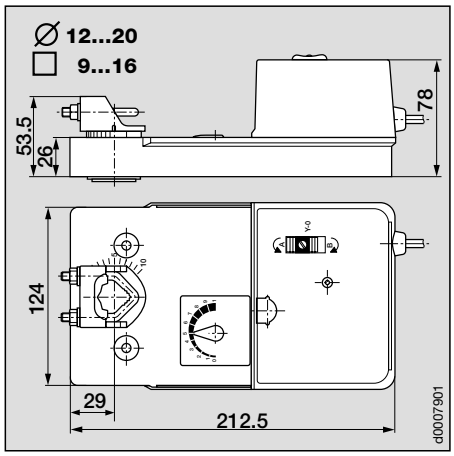

Dampers up to approx. 6 m²

Modulating damper actuator (AC/DC 24 V)

Control DC 0…10 V or 0…20 V phasecut

Position feedback DC 2…10 V

Versatility of control
Combining two different methods of control in a single damper actuator ensures greater flexibility at the planning stage.

Improved functional safety
The damper actuator has no limit switches and is overload-proof. It stops automatically when it reaches the damper or actuator end stop.

Easy functional check
A functional check of damper operation is simplicity itself: the gearing can be disengaged by simply pressing a pushbutton on top of the case. While the pushbutton remains depressed, the damper can be operated by hand.

Simple installation
The damper actuator is fitted with a universal spindle clamp for quick and easy mounting directly on the damper spindle. The actuator is supplied with an anti-rotation strap for fixing it in position.

Electrical accessories* (see Doc. 2. Z-…)
S1, S2 Auxiliary switches, page 8
P… Feedback potentiometer, page 10
*SG…24 Positioners
*ZAD24 Digital position indicator

Mechanical accessories
ZG-GM2 Damper linkage kit, page 11
ZDB-GM Limit stop, page 11

Control and monitoring functions, p. 7

Mounting instructions, page 12

Important
Read the notes about the use and torque requirements of the damper actuators on page 3.

Wiring diagram

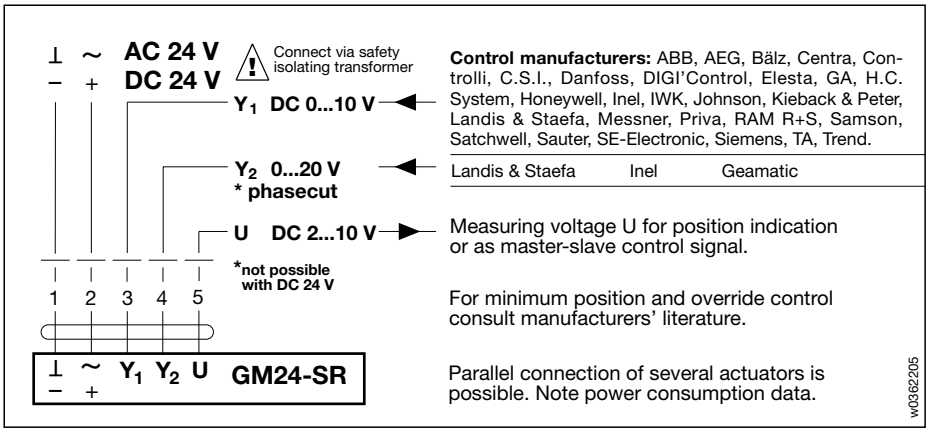

Technical data	GM24-SR
Nominal voltage	AC 24 V 50/60 Hz, DC 24 V
Nominal voltage range	AC 19.2...28.8 V, DC 21.6…28.8 V
For wire sizing	7 VA
Power consumption	3 W running, 2 W at rest
Connecting cable	0.9 m long, 5×0.75 mm²
Control signal Y_1 Control signal Y_2	DC 0…10 V @ input resistance 100 kΩ (0.1 mA) 0…20 V phasecut @ input resistance 8 kΩ (50 mW)
Operating range	DC 2…10 V (at control signal Y_1) 2…10 V phasecut (at control signal Y_2)
Measuring voltage U	DC 2…10 V @ max. 0.5 mA (for 0…100% angle of rotation)
Synchronisation tolerance	± 5%
Direction of rotation (at Y = 0 V)	reversible with switch A/B at switch position A ↶ resp. B ↷
Torque	min. 30 Nm (at rated voltage)
Angle of rotation	mechanically limited to 95°
Running time	135 s ± 15 s
Sound power level	max. 45 dB(A)
Position indication	0…10 (0 = stop ↶) and reversible indicator
Protection class	(safety low voltage)
Degree of protection	IP 54 (bottom cable entry)
Ambient temperature range Non-operating temperature Humidity test	–30…+50 °C –40…+80 °C to EN 60335-1
EMC	CE according to 89/336/EEC, 92/31/EEC, 93/68/EEC
Maintenance	maintenance free
Weight	2000 g

Dimensions

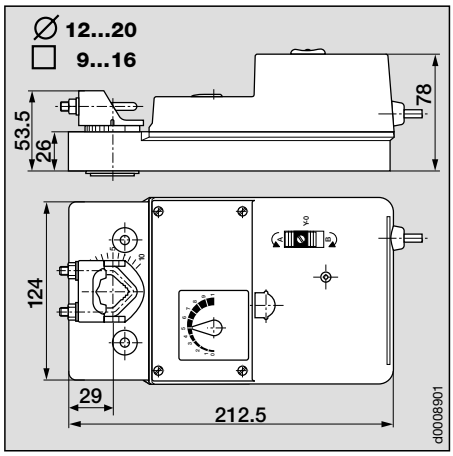

ENG-93001-93224-05.02-2M · Printed in Switzerland · ZSD · Subject to technical changes

Remote control 0...100%

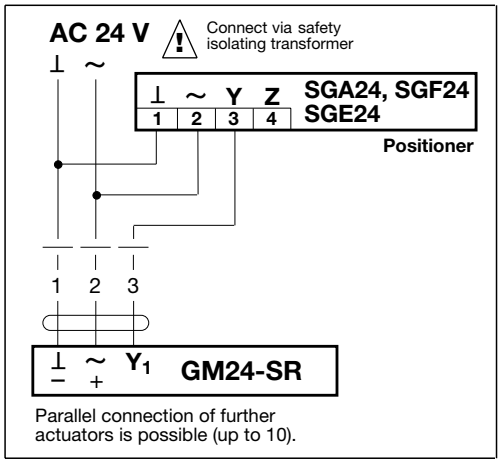

Minimum position

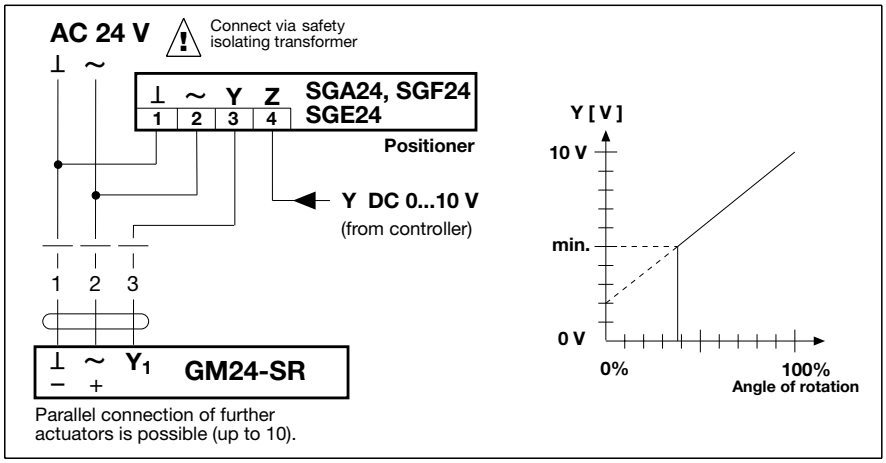

Override control

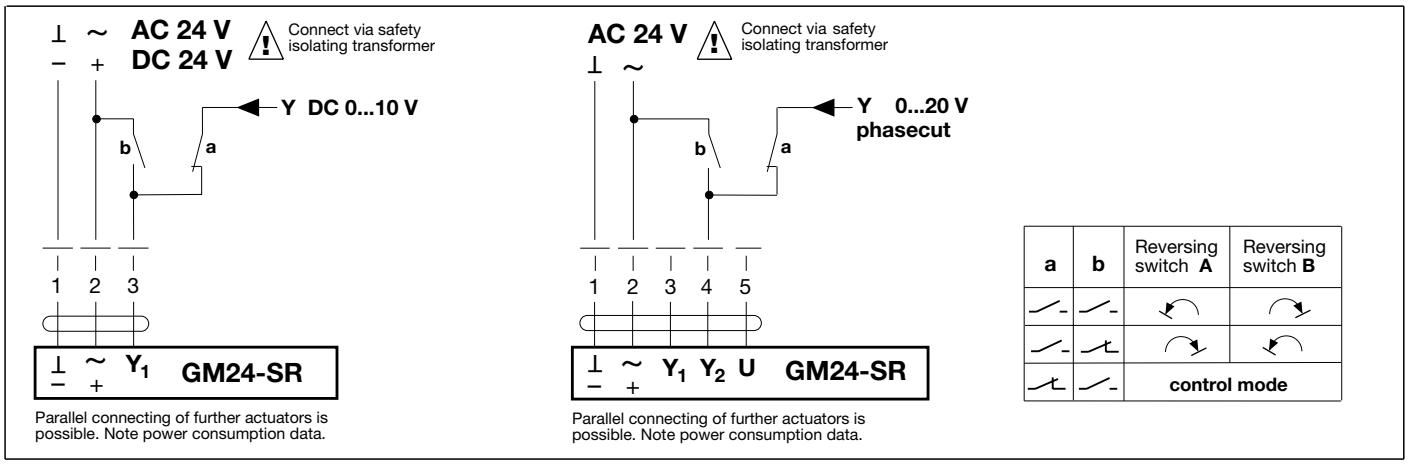

Position indication and/or master-slave control (depending on position)

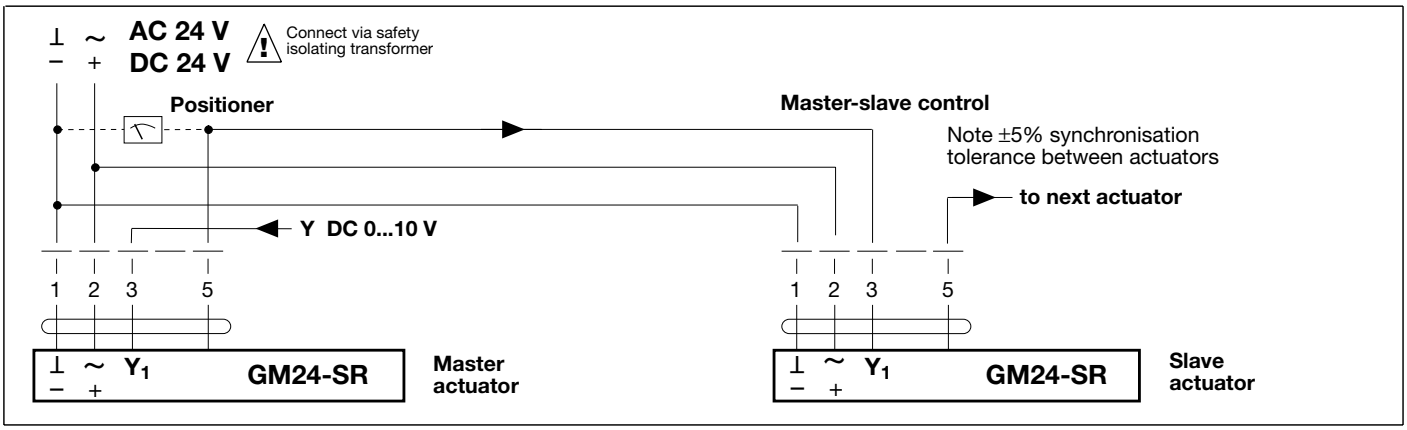

Function monitoring

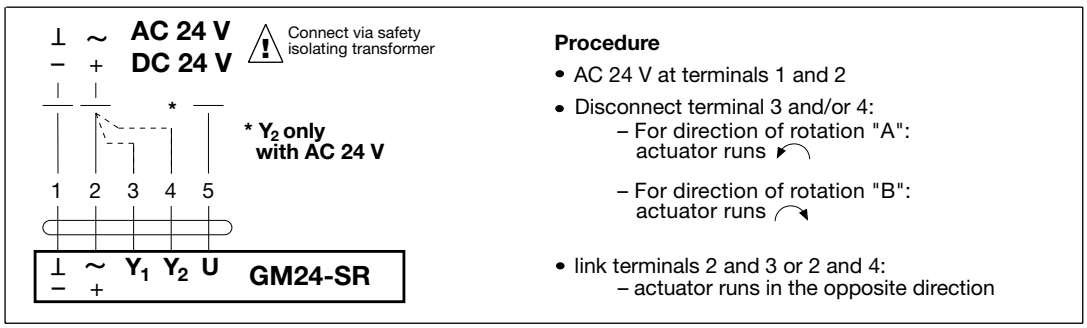

ENG-93001-93224-05.02-2M · Printed in Switzerland · ZSD · Subject to technical changes

Compatible with GM… and SM… damper actuators

(SM…: see documentation 2.SM-…)

Application

The auxiliary switch units S1 and S2 are intended for the signalling of end positions or for performing switching functions at any angular position.

Easy switch setting

A spindle provides a positive drive to the switch mechanism from the rotary motion of the damper actuator. The switching points of the microswitches can be set anywhere in the range from 0 to 10 by means of a dial and are then locked with a screw. The switch position can be read off at any time.

Simple installation

The auxiliary switch units S1 and S2 are suitable for direct mounting on Type GM… damper actuators or on Type P… feedback potentiometers. (The stack-mounting of two auxiliary switch units or of one unit and a Type SZS mid-position switch unit is not possible.)
Four extra-long screws are supplied for mounting the unit on Type GM24-SR and P… equipment.

Switch setting

1. Turn the damper actuator by hand to position 0.
2. Loosen the locking screw in the centre of the setting dial.
3. Rotate the dial until the arrow is pointing at the required switching point on the scale (0…10).
4. Re-tighten the locking screw.
5. Check the switching points by manual operation of the actuator; the setting dial turns at the same time. The microswitches operate whenever the arrow passes position 0 or 10 (white lines). The symbols indicate the respective switch positions.

Note

The reversible indicator plate and the pointer must be removed when using an auxiliary switch unit S1, S2.

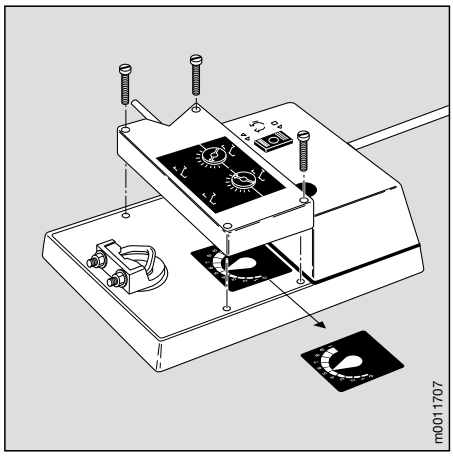

Wiring diagram

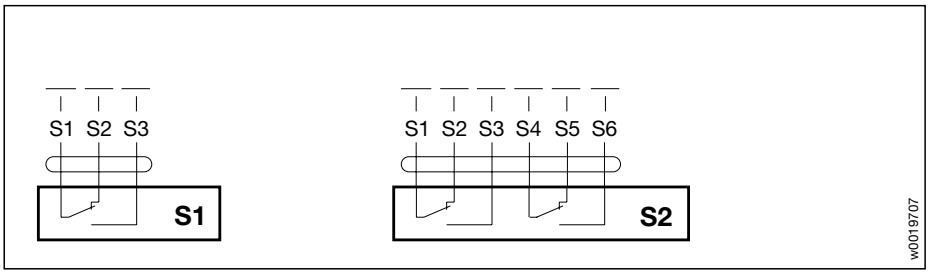

Technical data	S1	S2
Number of switches	1×SPDT	2×SPDT
Switching capacity	6 A (2.5 A) AC 250 V	
Connecting cable	0.9 m, 3×0.75 mm²	0.9 m, 6×0.75 mm²
Switching point	Adjustable over full actuator rotation 0...10. Pre-setting by scale possible, settings lockable.	
Protection class	II (all-insulated)	
Degree of protection	IP 54	
Ambient temperature range Non-operating temperature Humidity test	−30… +50 °C −40… +80 °C to EN 60335-1	
Weight	150 g	210 g

ENG-93001-93224-05.02-2M · Printed in Switzerland · ZSD · Subject to technical changes

Compatible with GM24, GM220, GM240 and SM24, SM220, SM240 damper actuators

(SM…: see documentation 2.SM-…)

Application

The SZS mid-position switch unit allows any required intermediate position to be preset.

Easy switch setting

A spindle provides a positive drive to the switch mechanism from the rotary motion of the damper actuator. The switching points of the microswitches can be set anywhere in the range from 0 to 10 by means of a dial and are then locked with a screw.

Remote control

As an alternative to using an SZS unit, it is better for many applications to be able to set the intermediate positions remotely, e. g. from the switchgear cubicle, instead of at the damper actuator itself. This arrangement requires the use of a positioner and a modulating damper actuator. Another advantage is that it allows several actuators to be connected in parallel.

Simple installation

The SZS mid-position switch unit is suitable for direct mounting on Type GM… damper actuators or on Type P… feedback potentiometers. (The stack-mounting of two SZS units or of one SZS unit and a Type S 1 or S 2 auxiliary switch unit is not possible.)

Note

The reversible indicator plate and the pointer must be removed when using a mid-position switch unit SZS.

Wiring diagram

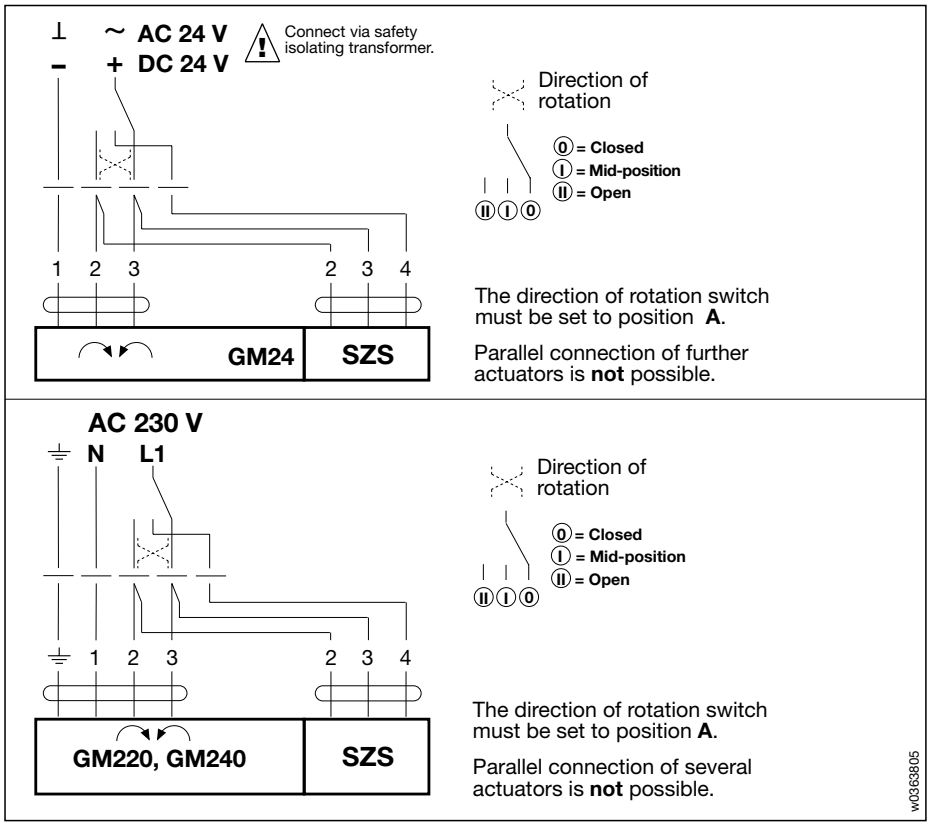

Technical data	SZS
Connecting cable	0.9 m, 3×0.75 mm²
Switching point	Adjustable over full actuator rotation 0…10. Pre-setting by scale possible, settings lockable.
Setting accuracy	2° rotation (at clamp)
Protection class	II (all-insulated)
Degree of protection	IP 54
Ambient temperature range Non-operating temperature Humidity test	–30… + 50 °C –40… + 80 °C to EN 60335-1
Weight	150 g

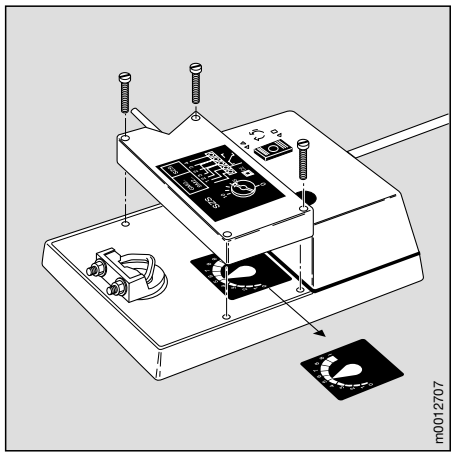

Compatible with GM… and SM… damper actuators

(SM…: see documentation 2.SM-…)

Application

The feedback potentiometer P… is used for the modulating control of dampers in conjunction with proportional action controllers with rigid feedback. It can also be used in conjunction with normal commercially-available systems for damper positions indication or as a positioner for actuators operating in parallel.

No adjustment needed

A spindle transmits the rotary motion of the actuator to the potentiometer. It is a positive drive and no adjustment is needed. If necessary, two feedback potentiometers can be mounted on top of each other.

Simple installation

The Type P… feedback potentiometer can be mounted directly on Type GM… damper actuators or on top of a second feedback potentiometer unit. A unit can also be stack-mounted with a Type S1 or S2 auxiliary switch unit or a Type SZS mid-position switch unit.
Four extra-long screws are supplied for mounting the unit on Type GM24-SR and P… equipment.

Wiring diagram

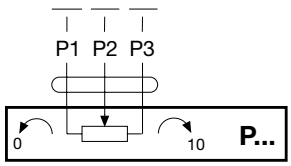

Types		Resistance data
P 140	Feedback potentiometer	140 Ω
P 200	Feedback potentiometer	200 Ω
P 500	Feedback potentiometer	500 Ω
P 1000	Feedback potentiometer	1000 Ω
P 2000	Feedback potentiometer	2000 Ω
P 2800	Feedback potentiometer	2800 Ω

Technical data	P...
Resistance data Tolerance	as above ± 5%
Rating	1 W
Linearity	± 2%
Resolution	1% min.
Residual resistance	max. 5% on both sides
Connecting cable	0.9 m, 3×0.75 mm^2
Degree of protection	IP 54
Ambient temperature range Non-operating temperature Humidity test	–30…+50 °C –40…+80 °C to EN 60335-1
Weight	150 g

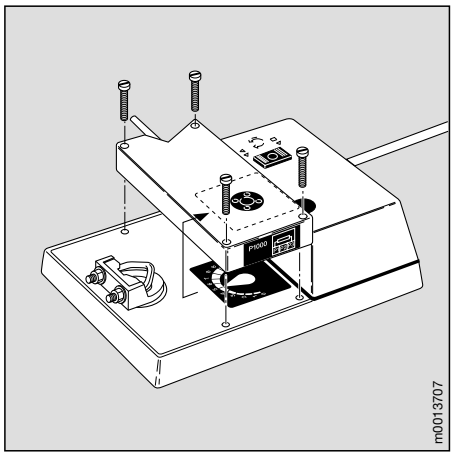

ENG-93001-93224-05.02-2M · Printed in Switzerland · ZSD · Subject to technical changes

Damper linkage kit ZG-GM2

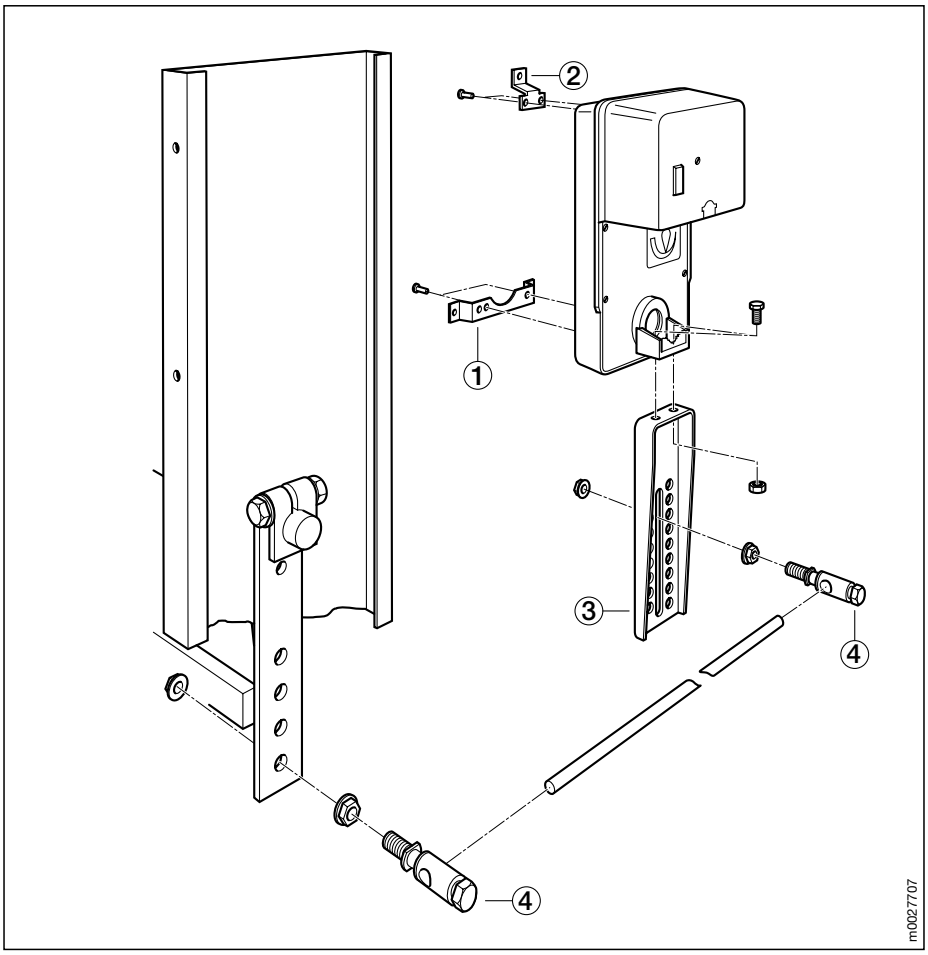

Application
Damper linkage kit is employed when direct actuation of the damper is impossible and a linkage must be used.

Kit specification
① – Front mounting bracket
② – Rear mounting bracket
③ – Crank arm
④ – 2 ball joints KG10
– 2 bolts M 6×16
– 7 self-tapping screws

Assembly
- Screw the front ① and rear ② mounting brackets to the underside of the actuator baseplate
- Remove the V-bolt
- Bolt the crank arm ③ in position
- Mount the actuator in a suitable position on a secure base with 3 screws
- The 3-point fixing and the 10 mm clearance at the base ensure trouble-free mounting even when the mounting surface is irregular
- Adjust and tighten the damper linkage and ball joints

Limit stop ZDB-GM

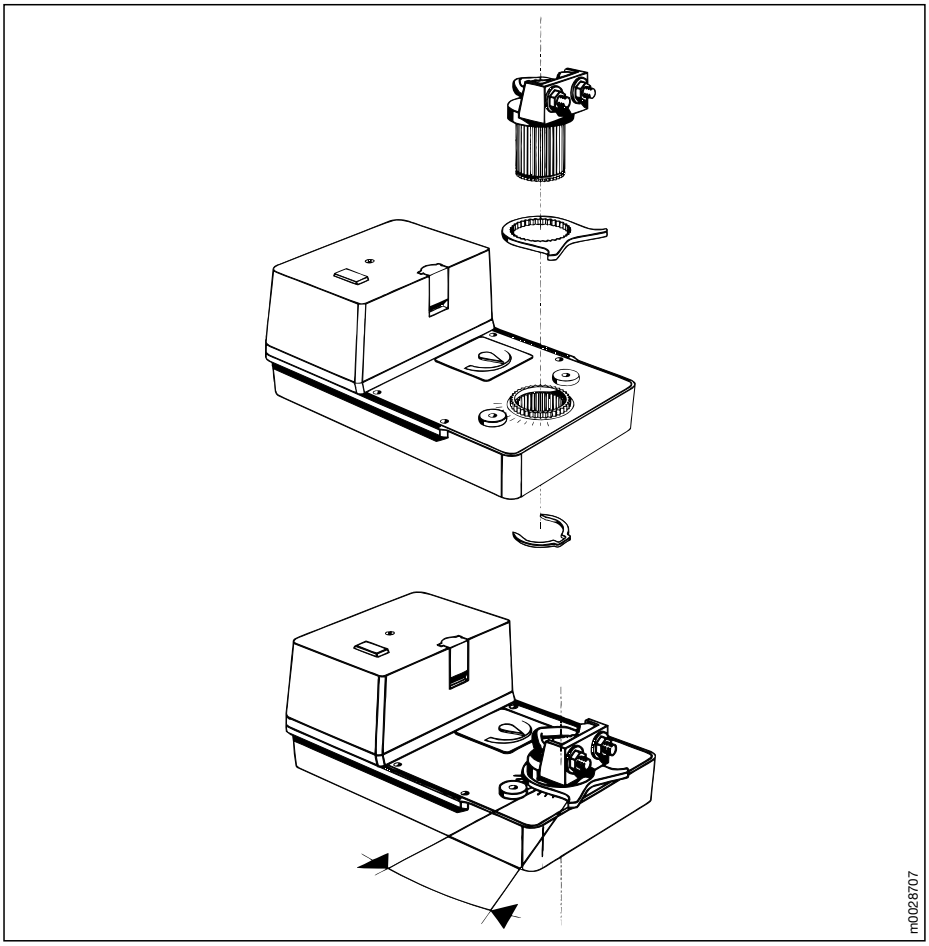

Application
Limit stop ZDB-GM is used on damper actuators GM… when an angle of rotation of less than 90° needs to be limited mechanically but the damper does not have a fixed stop on its own.
The limit can be set in 10° steps.

Assembly
- Fit the limit stop in the required angular position according to the instructions supplied

Mounting instructions for damper spindles at least 63 mm long.

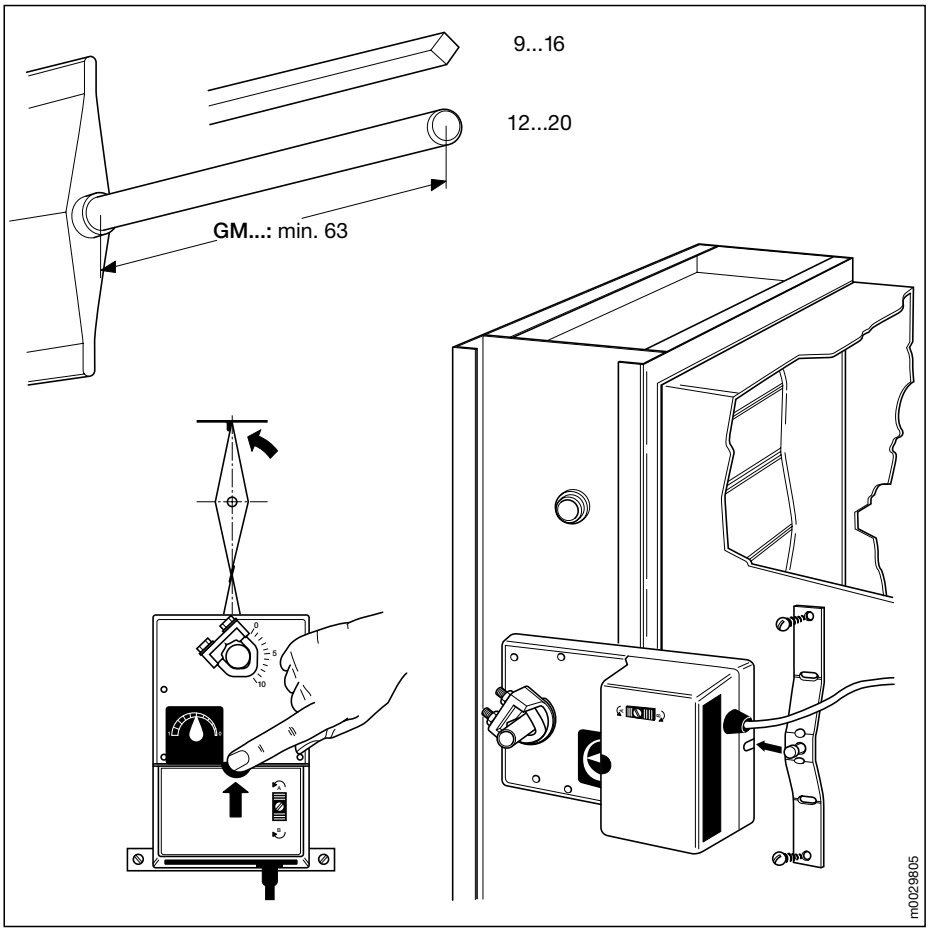

Preparations
- Place the actuator on the damper spindle
- Finger tighten the nuts on the V-bolt
- Bend the anti-rotation strap to fit, if necessary
- Fix the strap in position

Mounting and adjustment
- Move the damper to the closed position
- Disengage the gears by pressing the manual override pushbutton on the housing cover
- Turn the clamp to one division from the closed position and allow the gears to re-engage
- Align the actuator at 90° to the damper spindle
- Tighten the nuts on the V-bolt

Mounting instructions for damper spindles at least 20 mm long or when overlapping the damper frame.

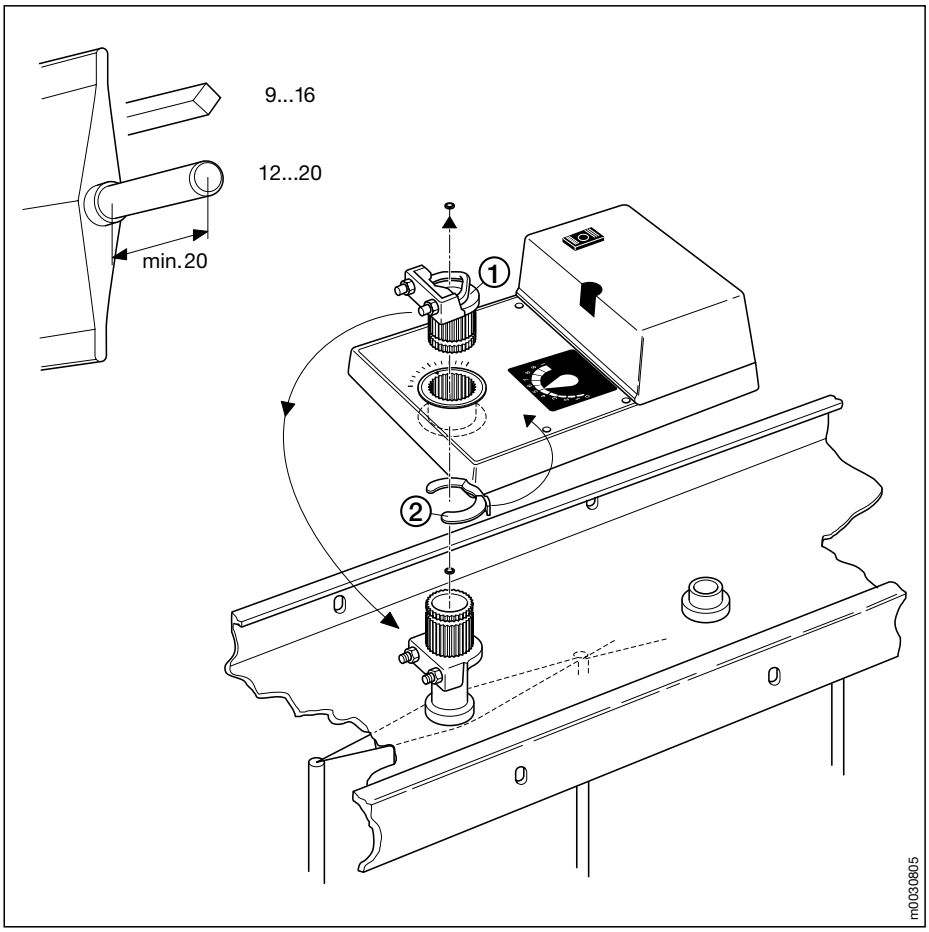

Mounting and adjustment
- Disengage the gears by pressing the manual override pushbutton on the housing cover
- Turn the clamp to one division from the closed position and allow the gears to re-engage
- Remove the clip ② and take out the clamp ①
- Slip the clamp onto the damper spindle
- Move the damper to the closed position
- Fit the actuator onto the clamp
- Replace the clip
- Bend the anti-rotation strap to fit
- Fix the strap in position

Notes on both methods of mounting
- Select direction of rotation with switch A/B
- The indicator plate is reversible

ENG-93001-93224-05.02-2M · Printed in Switzerland · ZSD · Subject to technical changes

Innovation, Quality and Consultancy: A partnership for motorizing HVAC actuators

Air applications

Standard actuators and spring-return actuators for air control dampers in HVAC systems

Safety actuators for motorizing fire and smoke extraction dampers

VAV systems for individual room air control

Water applications

Mixing actuators and motorized ball valves for HVAC water circuits

Globe valves and intelligent linear actuators – also for leading makes of valve

Contact the following for further information:

Belimo Headquarters

CH BELIMO Holding AG
Guyer-Zeller-Strasse 6
8620 Wetzikon, Switzerland
Tel. ++41 (0)1 933 11 11
Telefax ++41 (0)1 933 12 68
E-Mail: info@belimo.ch
Internet: http://www.belimo.ch

Belimo Subsidiaries

AT/ HR/ HU/ SK/ SL BELIMO Automation
Handelsgesellschaft m.b.H.
Geiselbergstrasse 26–32
1110 Wien, Austria
Tel. ++43 (0)1 749 03 61-0
Telefax ++43 (0)1 749 03 61-99
E-Mail: info@belimo.at

AU BELIMO Actuators Pty. Ltd.
Unit 10, 266 Osborne Avenue
Clayton South, VIC 3169
Australia
Tel. ++61 (0)3 9551 0201
Telefax ++61 (0)3 9551 0215
E-Mail: belimo@belimoactuators.com

CA BELIMO Aircontrols (CAN), Inc.
5716 Coopers Ave., Units 14&15
Mississauga, Ontario L4Z 2E8
Canada
Tel. ++1 (1)905 712 31 18
Telefax ++1 (1)905 712 31 24
E-Mail: webmaster@belimo.com

CH BELIMO Automation AG
Sales Switzerland
Guyer-Zeller-Strasse 6
8620 Wetzikon, Switzerland
Tel. ++41 (0)1 933 12 12
Telefax ++41 (0)1 933 12 66
E-Mail: verkch@belimo.ch
Internet: http://www.belimo.ch

DE BELIMO Stellantriebe
Vertriebs GmbH
Welfenstr. 27, Postfach 72 02 30
70599 Stuttgart, Germany
Tel. ++49 (0)711 1 67 83-0
Telefax ++49 (0)711 1 67 83-73
E-Mail: info@belimo.de
Internet: http://www.belimo.de

ES BELIMO Ibérica
de Servomotores, S.A.
C/San Romualdo, 12–14
28037 Madrid, Spain
Tel. ++34 91 304 11 11
Telefax ++34 91 327 25 39
E-Mail: info@belimo.es

FR BELIMO Servomoteurs
Z.A. de Courtry
33, Rue de la Régale
77181 Courtry, France
Tél. ++33 (0)1 64 72 83 70
Téléfax ++33 (0)1 64 72 94 09
E-Mail: mail@belimo.fr

GB BELIMO Automation UK Limited
The Lion Centre
Hampton Road West
Feltham, Middlesex, Great Britain
TW 13 6DS
Tel. ++44 (0)20 8755 4411
Telefax ++44 (0)20 8755 4042
E-Mail: belimo@belimo.co.uk

HK BELIMO Actuators Ltd.
Room 208, 2/F
New Commerce Centre
19 On Sum Street, Shatin, N.T.
Hong Kong
Tel. ++852 26 87 17 16
Telefax ++852 26 87 17 95
E-Mail: info@belimo.com.hk

PL BELIMO Silowniki S.A.
ul. Zagadkl 21
02-227 Warszawa, Poland
Tel. ++48 (0)22 817 35 10
Telefax ++48 (0)22 817 35 06
E-Mail: info@belimo.pl

SG BELIMO Actuators Pte Ltd
2, Jurong East Street 21
#04-31F IMM Building
Singapore 609601
Tel. ++65 6564 9828
Telefax ++65 6564 9038
E-Mail: info@belimo.com.sg

US BELIMO Aircontrols (USA), Inc.
43 Old Ridgebury Road
P.O. Box 2928
Danbury, CT 06810 USA
Tel. ++1 (1)203 791 99 15
Telefax ++1 (1)203 792 29 67
E-Mail: webmaster@belimo.com
Internet: http://www.belimo.com

Belimo Representatives and Agencies

AE BELIMO Automation
Middle East Office
P.O. Box 55427
Dubai, U.A.E.
Tel. ++971 (0)4 387 417
Telefax ++971 (0)4 387 415
E-Mail:
belimome@emirates.net.ae

BE BELIMO Automation N.V.-S.A.
Leuvensesteenweg 613
1930 Zaventem, Belgium
Tel. ++32 (0)2 757 92 95
Telefax ++32 (0)2 757 90 36
E-Mail: info@belimo.be

BG BELIMO Bulgaria Ltd.
j.k. Lagera, 3 Smolyanska Str.
bl. 56, entr. B, ap. 50
1612 Sofia, Bulgaria
Tel. ++3592 952 3470/1
Telefax ++3592 545 995
E-Mail: belimo@intech.bg

CN BELIMO Actuators Ltd.
18 FA3, 585 Longhua West-Road
200232 Shanghai, China
Tel. ++86 21 6469 2895
Telefax ++86 21 6469 2909
E-Mail: shanghai@belimo.com.hk

CN BELIMO Beijing
Rm 605, Beijing Hai Chang
Edifice, 44, Liang Ma Qiao Road
Chao Yang District
100016 Beijing, China
Tel. ++86 10 6462 1382
Telefax ++86 10 6462 1383
E-Mail: beijing@belimo.com.hk

CY R.E.S. Ltd.
P.O. Box 8297
Nicosia, Cyprus
Tel. ++357 (0)2 51 10 07
Telefax ++357 (0)2 49 65 47
E-Mail:
reliance@spidernet.com.cy

CZ BELIMO CZ (Ing. Ivar Mentzl)
Charkovská 16
10100 Praha 10, Czech Republic
Tel. ++420 (0)2 717 4 0 311
Telefax ++420 (0)2 717 43 057
E-Mail: info@belimo.cz

DK BELIMO A/S
Thomas Helstedsvej 7A
8660 Skanderborg, Denmark
Tel. ++45 86 52 44 00
Telefax ++45 86 52 44 88
E-Mail: info@belimo.dk

EE BELIMO Balticum AS
Töri 10 d
11313 Tallinn, Estonia
Tel. ++372 6 140 811
Telefax ++372 6 140 812
E-Mail: info@belimo.ee

FI Oy Suomen BELIMO Ab
Insinöörinkatu 2
00810 Helsinki, Finland
Tel. ++358 (0)9 75 11 65 00
Telefax ++358 (0)9 75 11 65 31
E-Mail: belimo@belimo.fi

GR BELIMO Air Controls
29, Tagm. Plessa, Kallithea
GR 17674 Athens, Greece
Tel. ++30 (0)1 94 00 766
Telefax ++30 (0)1 94 00 767
E-Mail: belimogr@tee.gr

IE Safegard Systems Ltd.
Systems House, Unit 34
Southern Cross Business Park
Bray, Co Wicklow, Ireland
Tel. ++353 (0)1 2761600
Telefax ++353 (0)1 2761611
E-Mail: info@safegard.ie

IL Shemer Representations
P.O. Box 296
56101 Yehud, Israel
Tel. ++972 3 536 51 67
Telefax ++972 3 536 05 81
E-Mail: shemer@shemerep.co.il

IN BELIMO Vitek Air Controls
C-114 Lancelot, First Floor
S.V. Road, Borivali (West)
Mumbai 400 092, India
Tel. ++91 22 806 21 63
Telefax ++91 22 806 21 63
E-Mail: bvac@bom2.vsnl.net.in

IS Hitatækni ehf.
Langholtsvegi 109
104 Reykjavik, Iceland
Tel. ++354 5 88 60 70
Telefax ++354 5 88 60 71
E-Mail: fridmar@hitataekni.is

IT BELIMO Servomotori S.r.l.
Via Stezzano, 5
24050 Zanica BG, Italy
Tel. ++39 035 67 26 82
Telefax ++39 035 67 02 00
E-Mail: info@belimo.it

KR HANMO Corporation
3rd Floor, Yeosam Bldg. 648-23
Gangnam-Ku, Seoul, Korea
Tel. ++822 3453 8225
Telefax ++822 3453 8228

LB Energy Center (EC)
Hamra, Leon Street, Shatilla,
Bldg. 4th Floor,
P.O. Box 113-6955
Beirut, Lebanon
Tel. ++961 (0)1 35 38 23
Telefax ++961 (0)1 35 38 23
E-Mail:
belimome@emirates.net.ae

NL BELIMO Servomotoren B.V.
Radeweg 25, 8171 MD Vaassen
Postbus 300, 8160 AH Epe,
Netherlands
Tel. ++31 5 78 57 68 36
Telefax ++31 5 78 57 69 15
E-Mail: info@belimo.nl

NO BELIMO Spjeldmotorer A/S
Konowsgate 5
0192 Oslo 1, Norway
Tel. ++47 22 70 71 71
Telefax ++47 22 70 71 70
E-Mail: info@belimo.no

PH BELIMO Actuators Philippines
Rm.# 507 Anita Build., 5th Floor
1300 Quezon Ave.,Cor.South Ave.
1103 Quezon City, Philippines
Tel. ++63 (2) 373 5440
Telefax ++63 (2) 373 5424
E-Mail: philippines@belimo.com.hk

RO Mano Construct srl
Dr Felix 53, ap 14, sector 1
Bucuresti, Romania
Tel. ++401 220 05 78
Telefax ++401 221 59 95
E-Mail: manoconstruct@fx.ro

RU BELIMO Servomotors
Russia Ltd.
Nizhnyaya Pervomaiskaya,
46 Bld.1, Office 303
105203 Moscow, Russia
Tel. ++7 095 965 74 64
Telefax ++7 095 965 74 73
E-Mail: belimo.russia@mtu-net.ru

SE BELIMO Spjällmotorer AB
Hägerstens Allé 88
129 37 Hägersten, Sweden
Tel. ++46 (0)8 88 07 00
Telefax ++46 (0)8 97 85 75
E-Mail: info@belimo.se

SY Philippe A. Jebran
P.O. Box 7791
Damascus, Syria
Tel. ++963 11 231 6586
Telefax ++963 11 231 4052
E-Mail:
belimome@emirates.net.ae

TR BELIMO Otomasyon A.S.
Hayriye Caddesi No. 16
TR-80060 Galatasaray-Istanbul
Turkey
Tel. ++90 (0)212 249 76 43
Telefax ++90 (0)212 243 02 58
E-Mail: info@belimo.com.tr

TW Chianseng Enterprise Co. Ltd.
2F, No. 21, Tong Fong Street
Taipei, Taiwan
Tel. ++886 2 27 08 77 80
Telefax ++886 2 27 02 90 90
E-Mail: taiwan@belimo.com.hk

UA BELIMO Ukraine S.A.R.
34-A, Ul. Yurkovskaya, Appt.N°2
254080 Kiev, Ukraine
Tel./Telefax ++380 44 463 7586
E-Mail: comaster@belimo.kiev.ua

ZA BELIMO Actuators Southern Africa cc
P. O. Box 2483
Alberton 1450, South Africa
Tel. ++27 (0)11 868 5681
Telefax ++27 (0)11 900 2673
E-Mail: belimo@mega.co.za

ENG-93001-93224-05.02-2M · Printed in Switzerland · ZSD · Subject to technical changes