powercompact
&
IR33 preview:

product presentation

Plug-in range

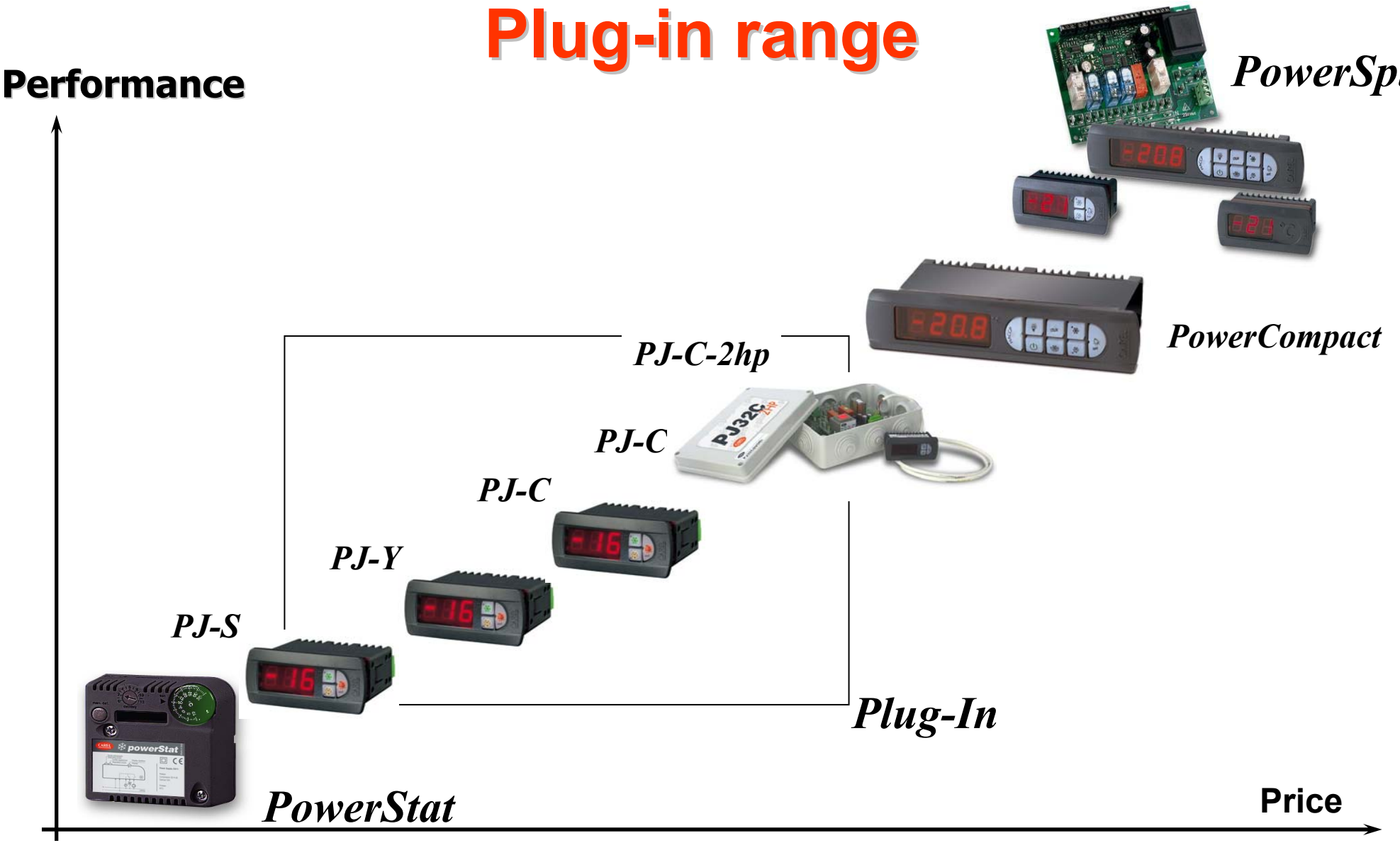

powercompact: new display

Output status

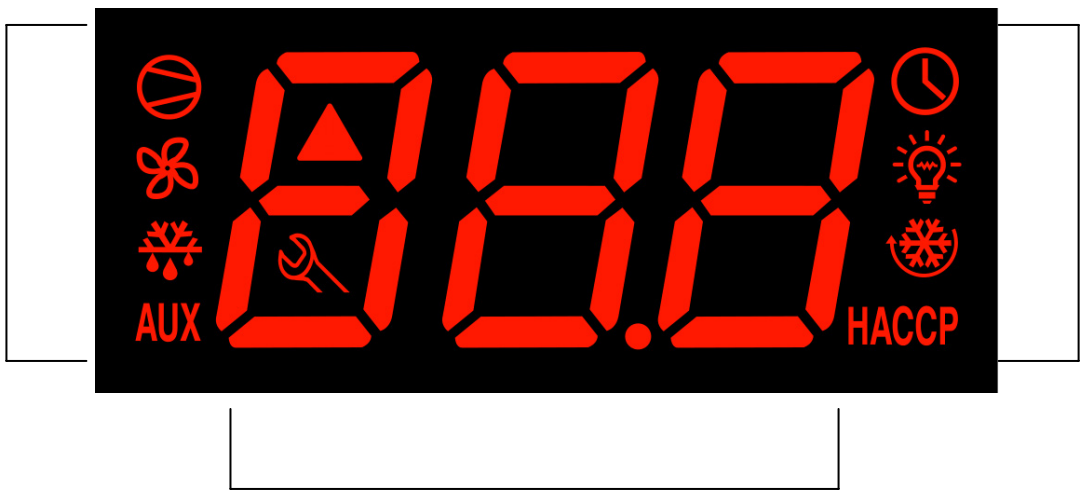

Operating mode

Highly brightness LED

powercompact: main Hardware features

1. New controllers range from 2 up to 5 digital outputs
2. 2 Hp relay models for the compressor
3. 2 NTC probes +2 digital inputs/probes
4. Direct power supply 230 Vac
5. Models fitted with internal switching power supply in order to
   - ✓ increase the power and reduce the waste of heat
   - ✓ permit direct wide range power supply from 115 to 230 Vac
6. Terminal board model available: choose faston/removable or fixed terminals

powercompact: Software features

1. Condensation fan management
2. Second evaporator management
3. HACCP functions
4. Pump-down
5. Digital inputs configurable as NTC probes
6. Keypad functions block: can be completely customized
7. Easy parameter configuration: standard or through the category name
8. Defrost management by real time clock
9. Selection mode of defrost management type with intervals variables according to previous defrost time duration

powercompact: accessories

✓ **Second display** for the versions with switching power supply

✓ Additional RS485 serial board that can be added for all models

✓ Models fitted with clock board allowing defrost in real time

✓ Programming key

✓Remote control infrared sensor

Market remarks

We deal with two different market types with different technical needs, support modes, volumes and price levels

OEM

- ✓Big volumes
- ✓Basic performances
- ✓High competitiveness
- ✓Frequent need for customisation

Wholesalers

- ✓Limited volumes
- ✓Standard products
- ✓High performances
- ✓Plus compared with the determinant competitors

What do we want to achieve?

We want to become market leaders.

OEM

Wholesalers

IR33: new display

High efficiency green LEDs

Operating Information & Output status

IR33: display overview

IR33: new software functions

=

Current functions: the same setting mode and parameter meaning

IR33: main electrical diagrams

New !

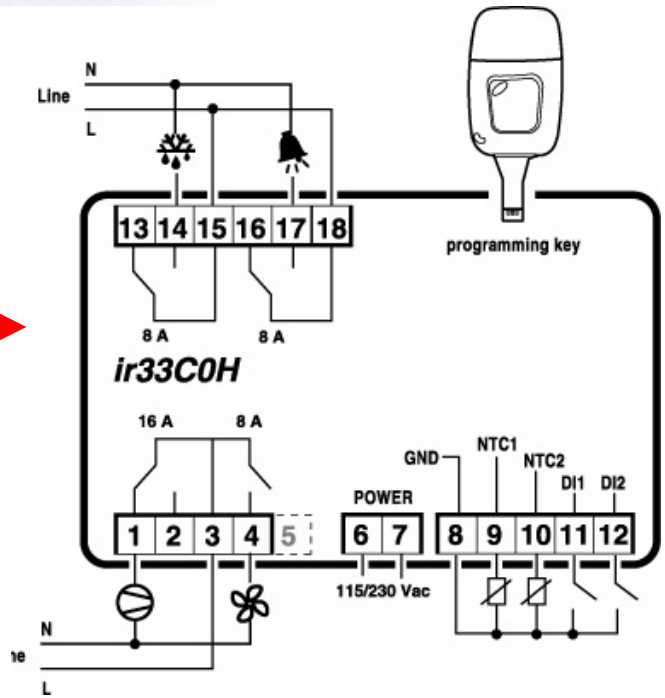

4 relays, 115/230 Vac

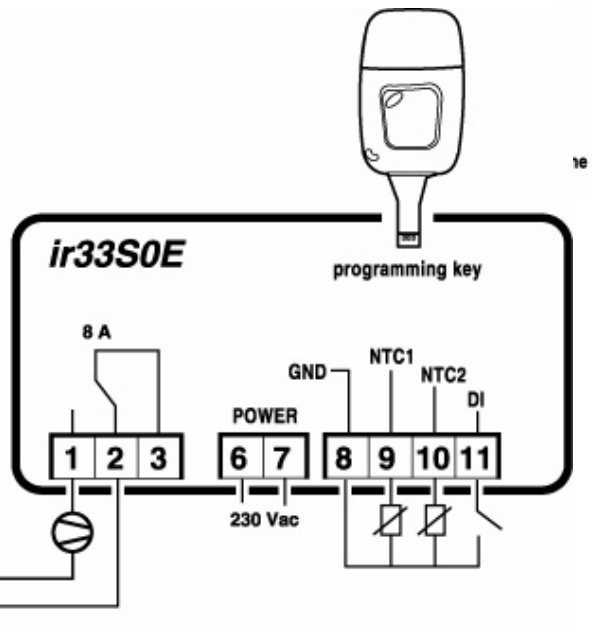

1 to 3 relays, 230 Vac

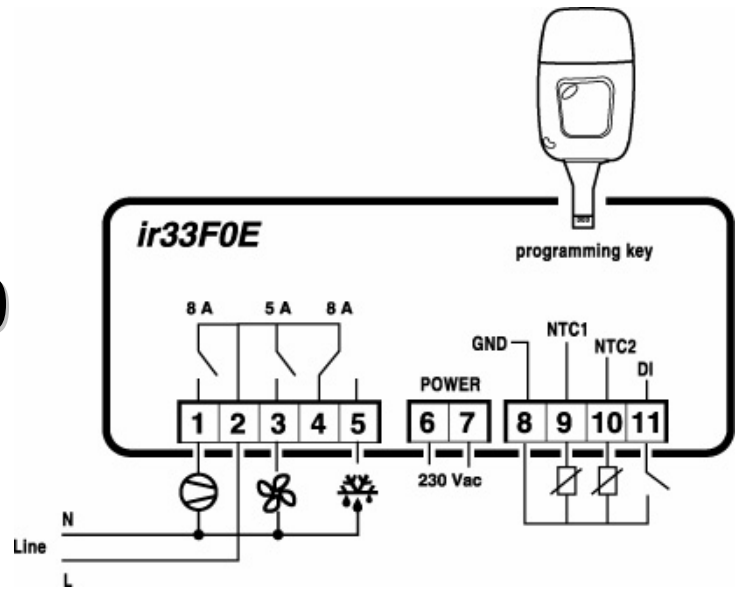

IR33: accessories

- ✓External display for versions with switching power supply

- ✓Optional RS485 serial board for all models

- ✓Models with built-in Real Time Clock

- ✓Programming key

- ✓Infrared option for remote control

Range positioning

Performance

MasterCella Compact

MPX

IR-C

IR-Y

New

IR-S

MasterCella Split

Price

Plug-in range

New NTC probes

NTC0HT00**

0T150 °C

(1.000 pcs on stock)

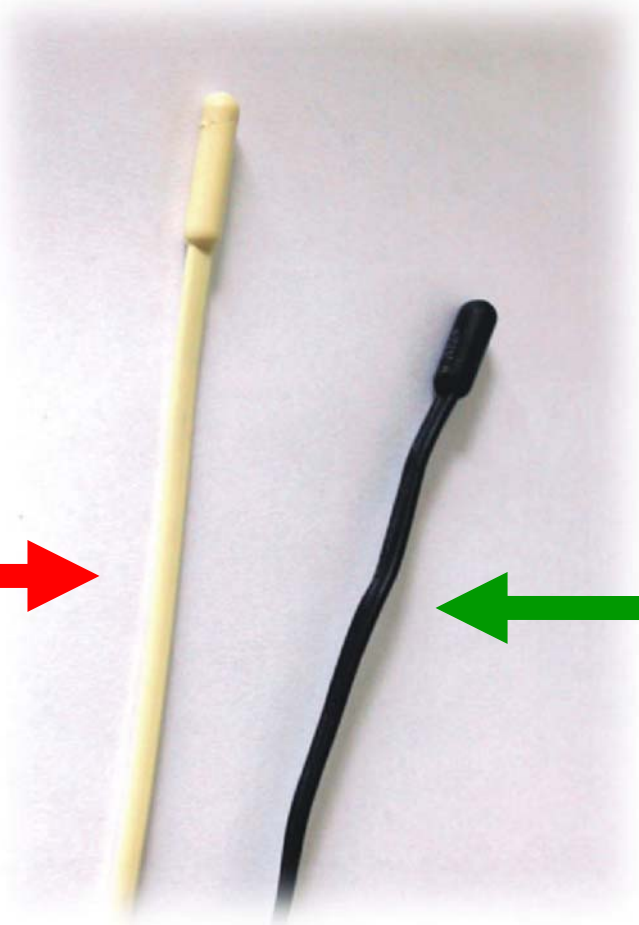

NTC0HP00**

-40T90 °C

Time to market

Product launch plan & documentation

~~01/09/2003 (completed)~~
product available

IKK 2003 Preview
January 2004

Mostra Convegno 2004
Preview
June 2004

www.carel.com

Now it's high time to think about something new.

Thanks to IR32.

Ir32: Success factors

Green LED: more attractive, distinguishing if compared to the competitors' products

4 relays, 2 programmable digital inputs, optional serial

Ergonomic keypad

Innovative and pleasant aesthetic

IR33: next steps

Then new IR33 is a basic platform to develop new product ranges

Phase 1

Phase 2

Phase 3

Range positioning

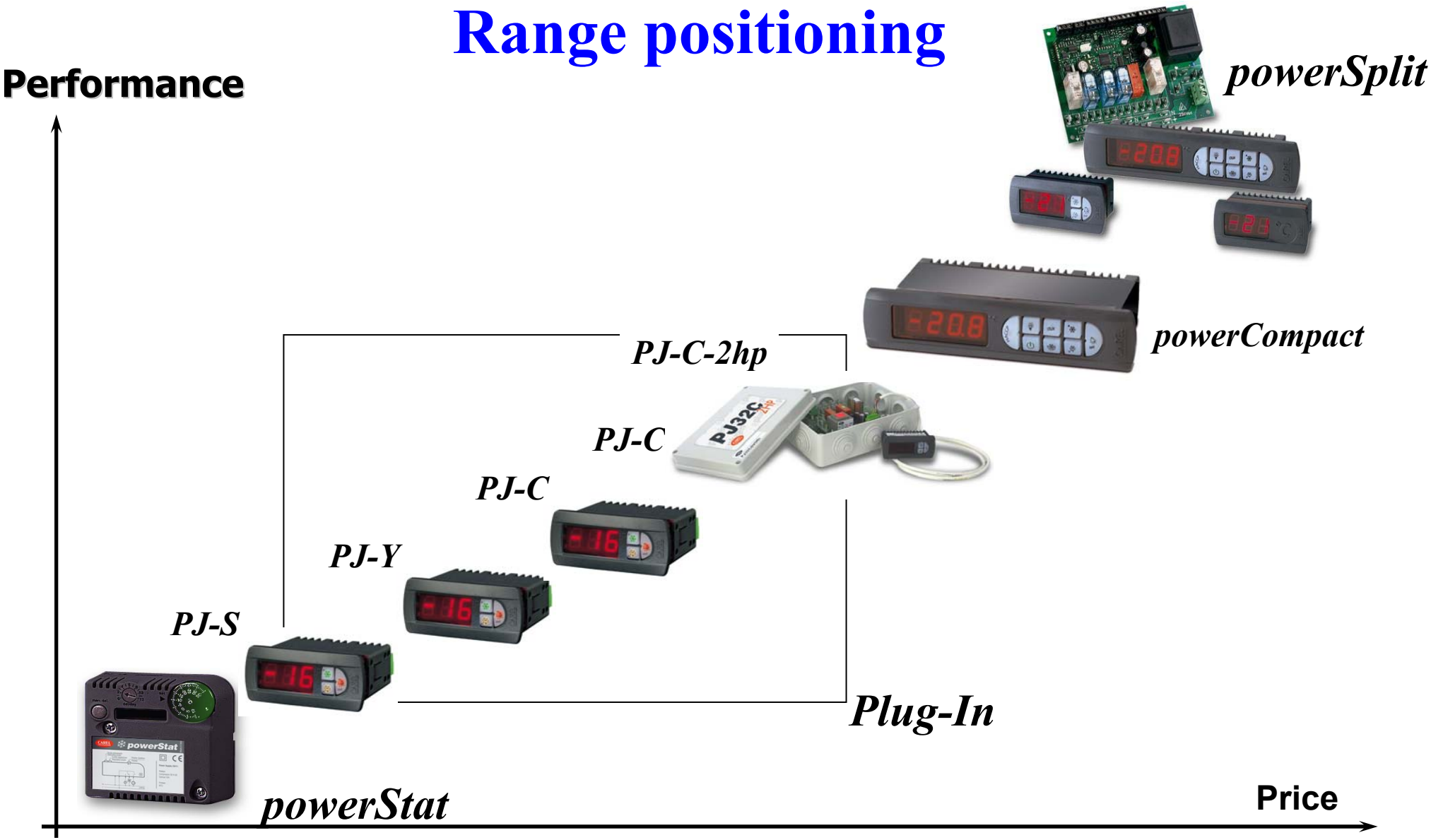

Plug-in range

CAREL

powerCompact: models and placing in the market

Performance

Top

115/230 Vac - Switching

PB00F0HA00 4 outputs (16 comp, 8 def)
PB00C0HN00 4 outputs (2Hp comp, 16 def)
PB00C0HB00 4 outputs (2Hp comp,16 def,RTC)
PB00H0HN00 5 outputs (2Hp comp,16 def)
PB00H0HB00 5 outputs (2Hp comp,16 def,RTC)

230 Vac – Trasformer

Basic

fixed

PB00S0EA00 2 outputs
PB00F0EN00 3 outputs

Faston

PB00S0EA10 2 outputs
PB00F0EN10 3 outputs

Comp=compressor def =defrost RTC=real time clock

Price

The range

This product has been designed to complete the range of plug-in family, which have met a great approval in an interesting sector such as the catering industry.

Family feeling

1. According to Carel the design has always been a decisive factor in the development of new products.
2. The plug-in range combines a pleasant appearance and high performances required by the user.

Family feeling & Customisation

powerCompact – wiring diagrams

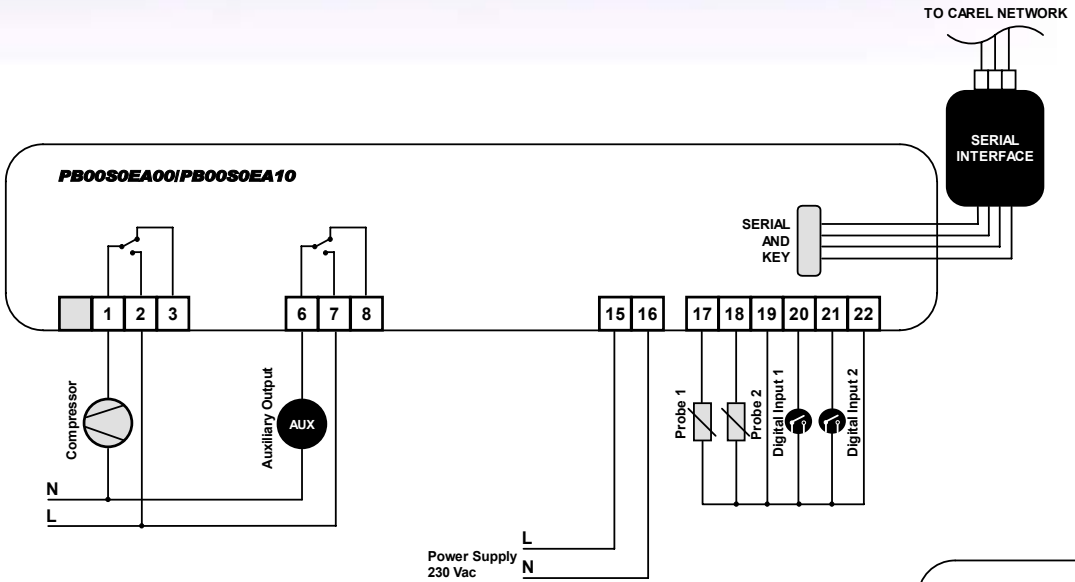

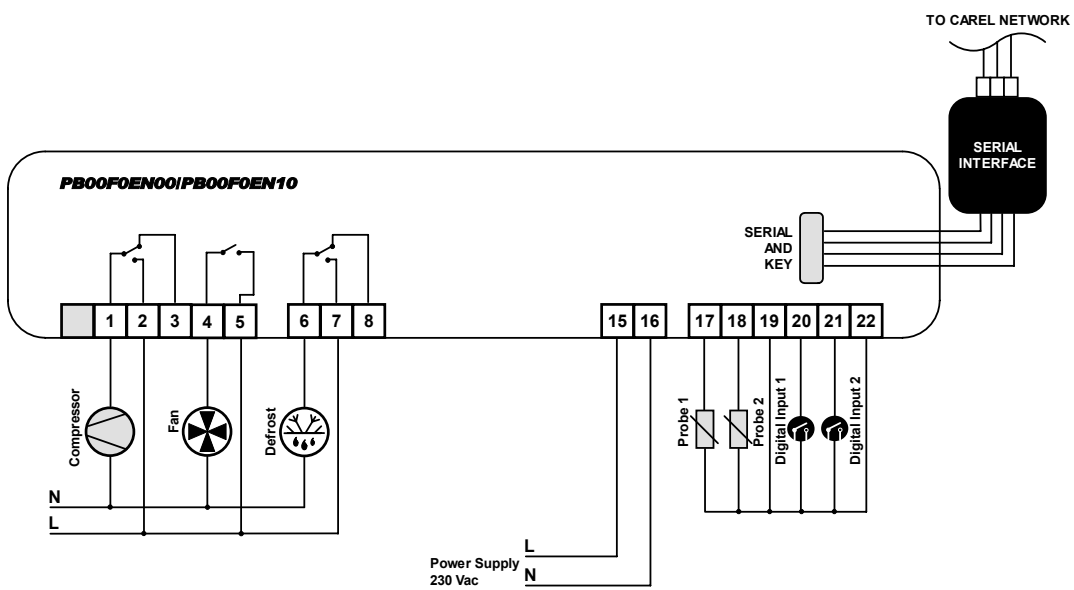

powerCompact – wiring diagrams

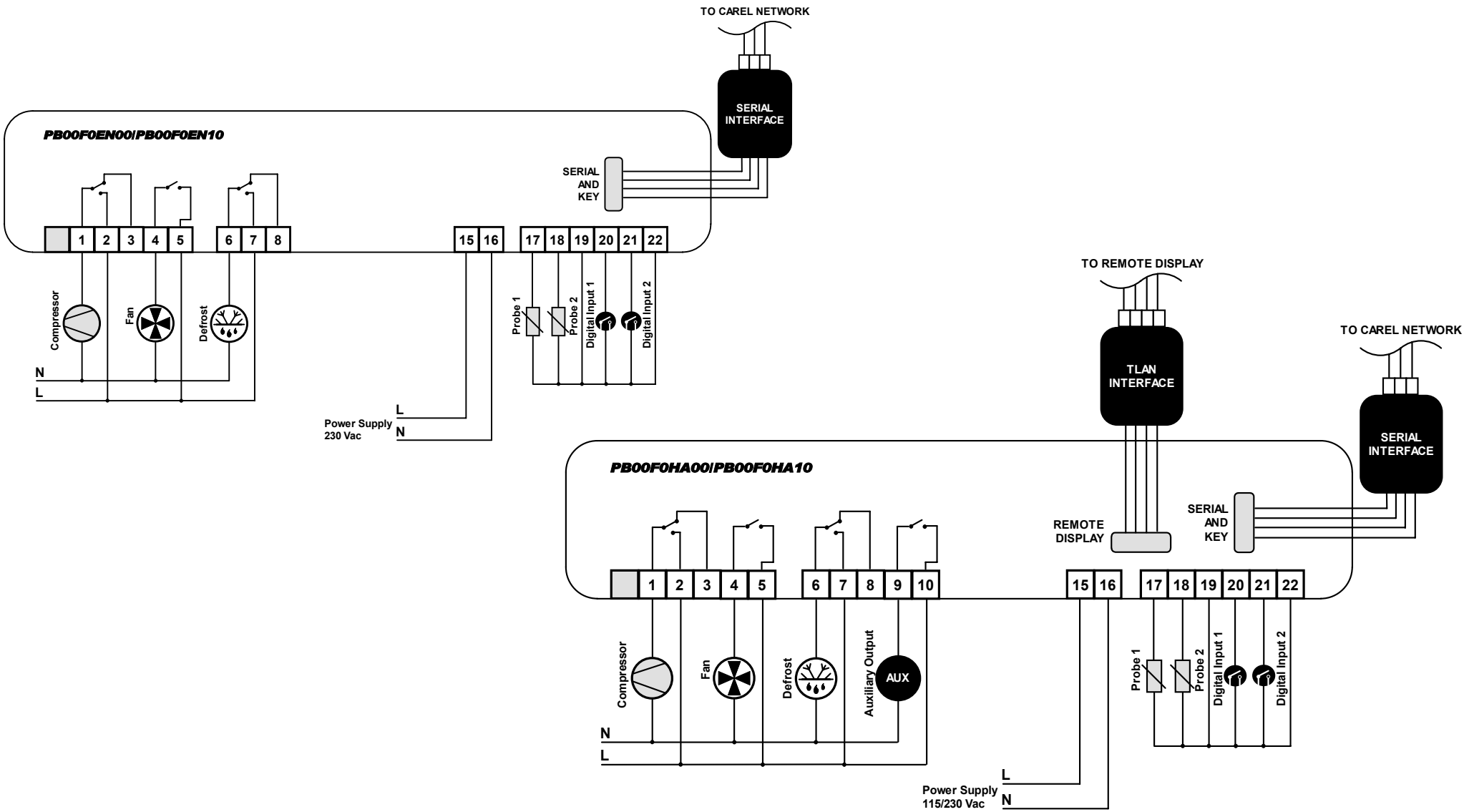

powerCompact – wiring diagrams

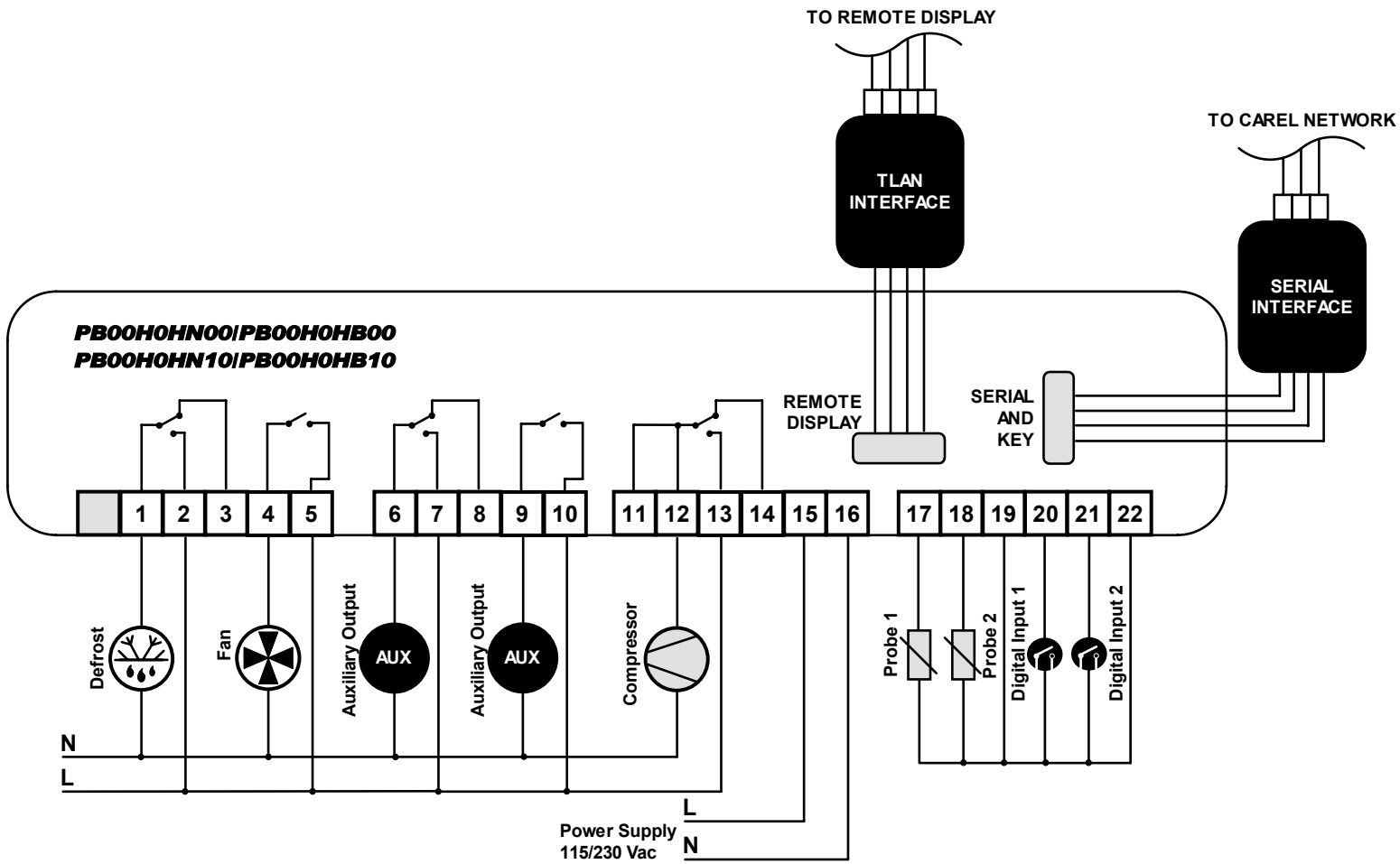

powerCompact: dimensions

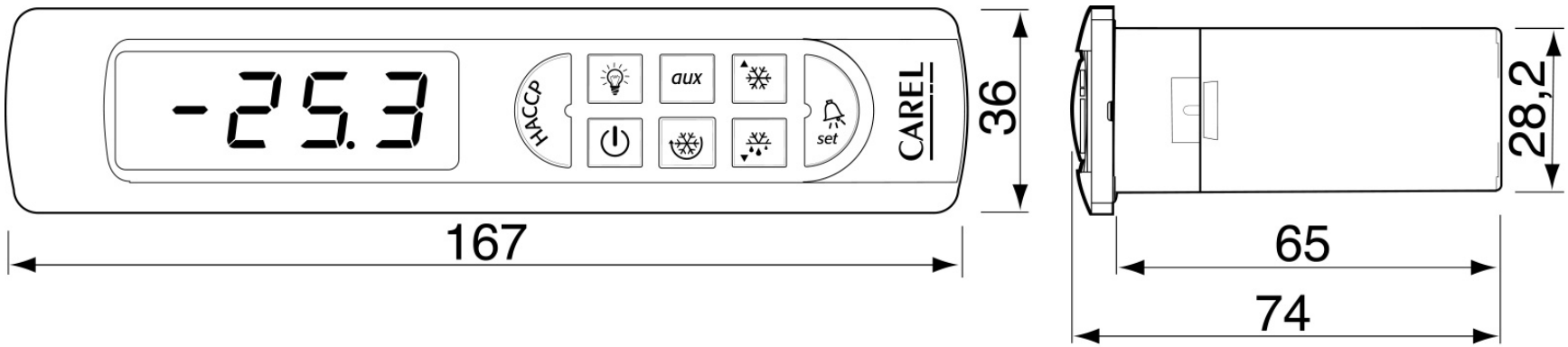

Test, quality, reliability

100% of Carel production is submitted to two tests:

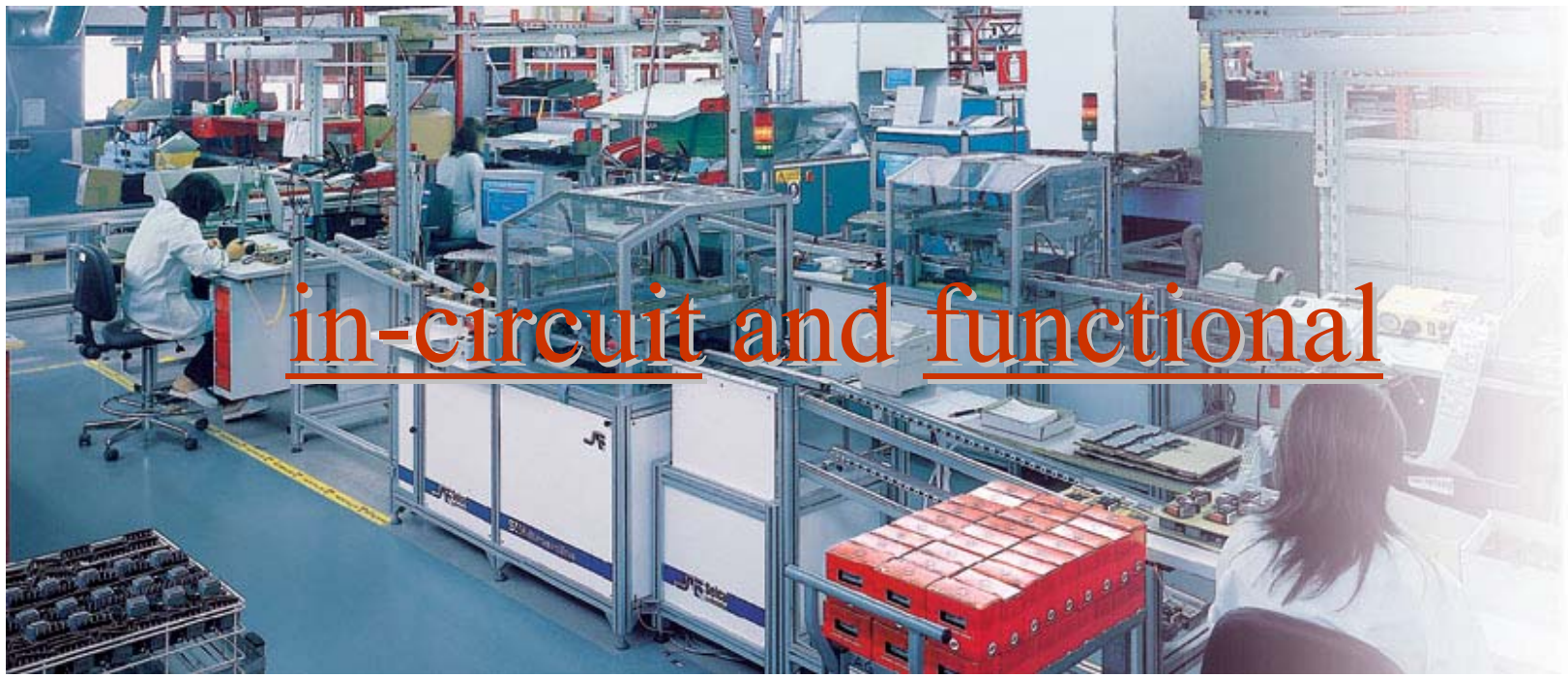

- in-circuit and functional

From where have we started?

1. IR32 has been having a great success
2. Its characteristics has always been rewarded by the market
3. The new product will be destined mainly to the distributors and medium OEMs

IR33: new hardware

Ir33S00000 - 12Vac
Ir33S0L000 - 12/24 Vac-dc

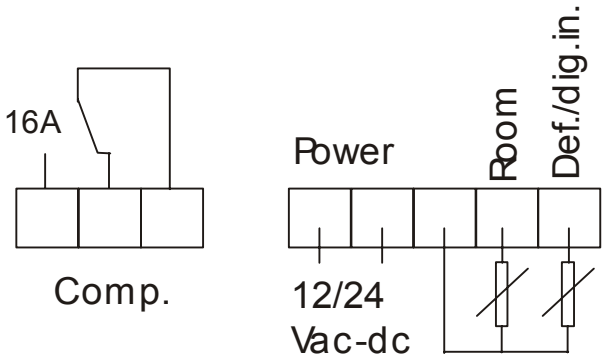

Ir33Y00000 -12 Vac
Ir33Y0L000 - 12/24 Vac-dc

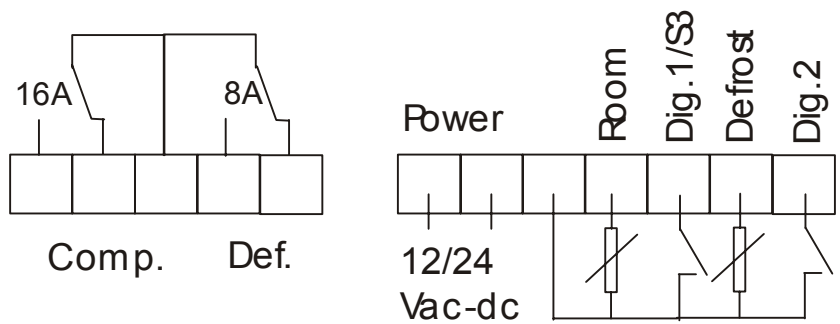

IR33: new hardware

Ir33F00000 - 12 Vac
Ir33F0L000 - 12/24 Vac-dc

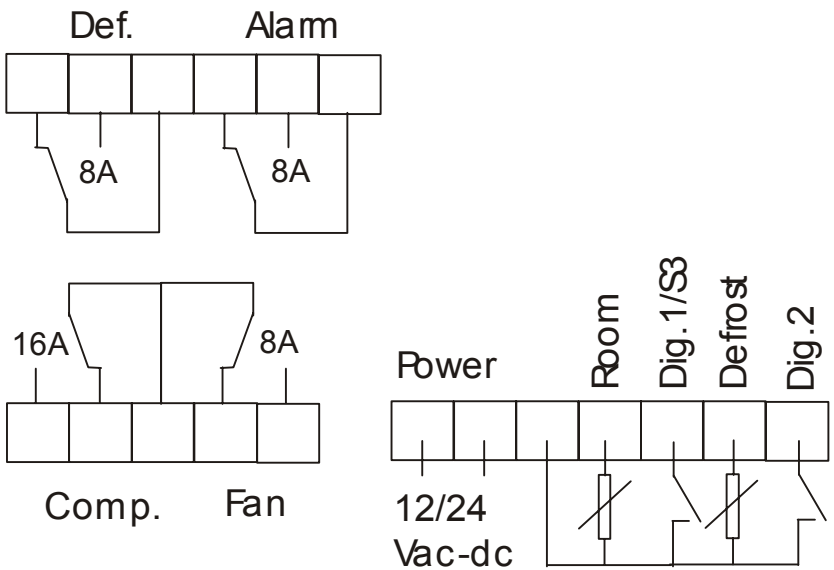

Ir33F0H000 - 115/230 Vac

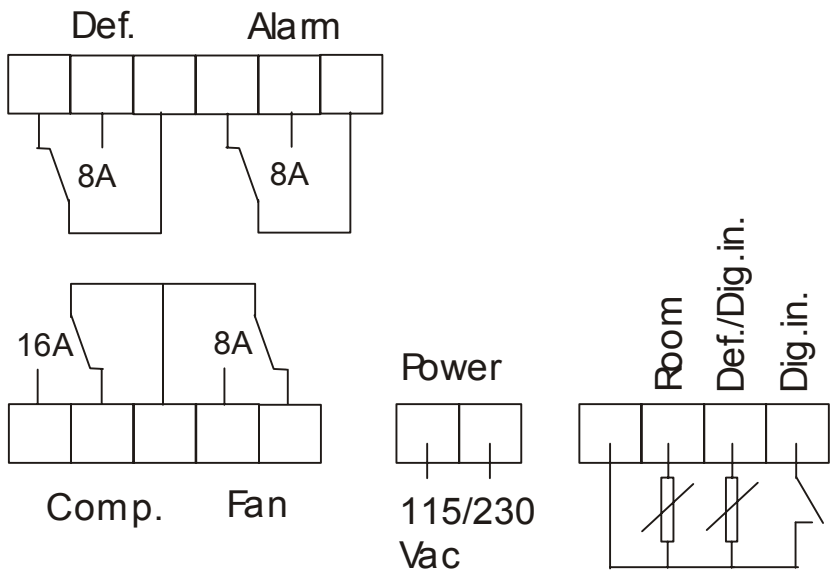

IR33: new hardware

Ir33S0E000 - 230 Vac

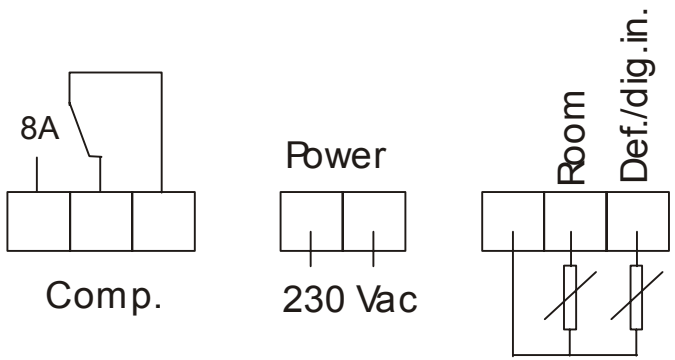

Ir33S0EA00 - 230 Vac

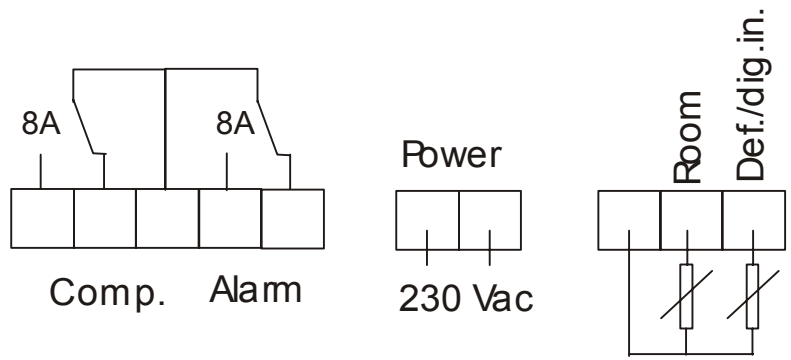

Ir33C0E000 - 230 Vac

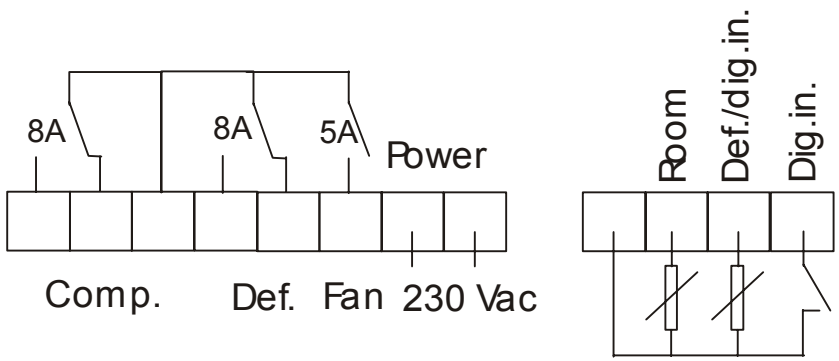

Ir33: models and

Performance

Price

Basic

12Vac	230 Vac
IR33S00000	IR33S0E000
IR33Y00000	IR33S0E0R0
IR33F00000	IR33C0E0R0
IR33F000R0	IR33C0E000
	IR33C0EC00

Top

12/24 Vac-dc	115/230 Vac
IR33S0L000	IR33S0H0R0
IR33S0L0R0	IR33C0H0R0
IR33Y0L0R0	IR33C0HCR0
IR33F0L000	
IR33F0L0R0	

Product Launch Plan

	New		
Launch plan	**31/01/2003**	**31/05/2003**	**19/09/2003**
Brochure	**14/02/2003**	**13/06/2003**	**30/09/2003**
Showcase	**28/02/2003**	**30/06/2003**	**18/10/2003**
Posters for Sales Network ITA/GB/D	**14/02/2003**	**13/06/2003**	**30/09/2003**